REVISION			
REV	DESCRIPTION	DATE	APVD
A	INITIAL RELEASE	10/7/03	CDS

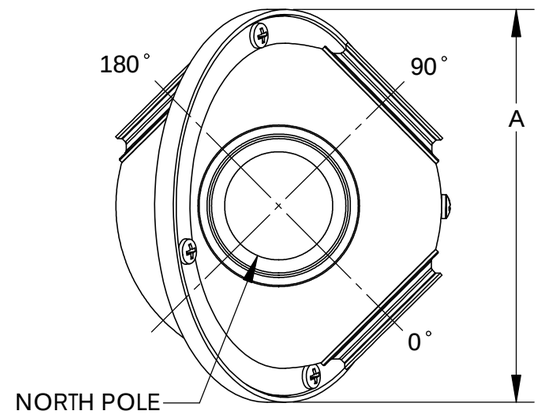

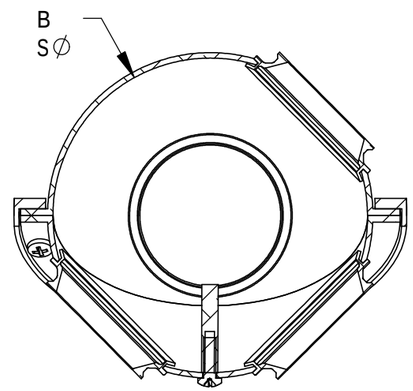

SECTION A-A

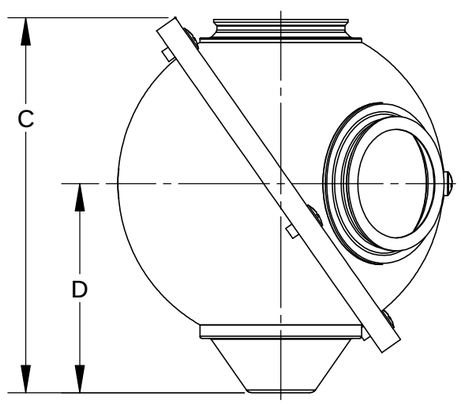

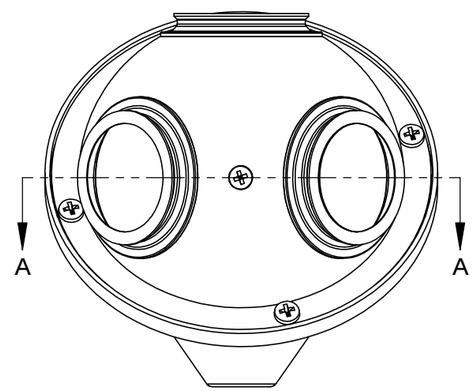

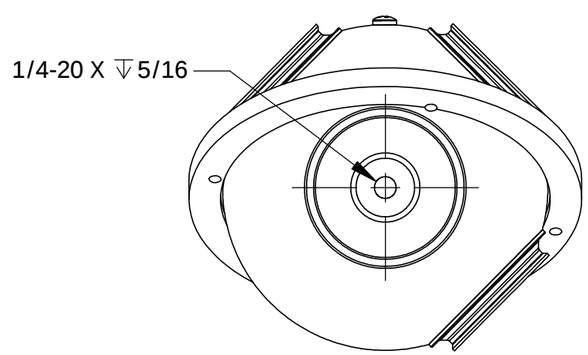

MOUNTING CONFIGURATION
3", 4" & 6" SPHERES

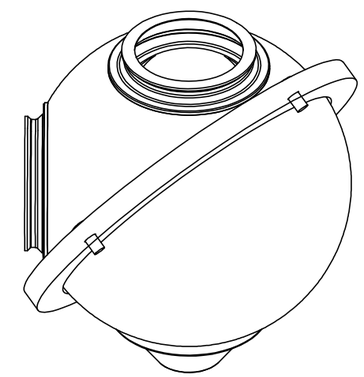

3 PORT CONFIGURATION

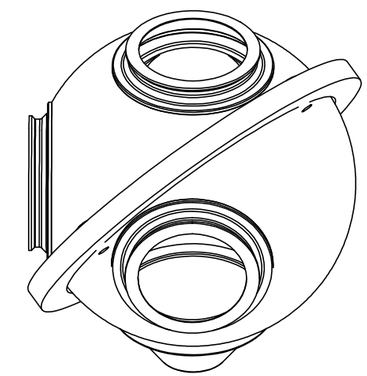

4 PORT CONFIGURATION

NOTE - DIMENSIONS SUBJECT TO CHANGE WITHOUT NOTICE.

		Dimensions [inches]				Port Diameters [inches]			
Model	Part Number	A	B	C	D	0 Deg.	90 Deg.	180 Deg.	North Pole
3P-GPS-030-SF	AS-02253-030	3.62	2.90	3.455	1.927	1.00	1.00	n/a	1.00
3P-GPS-030-IG	AS-02303-030	3.62	2.90	3.455	1.927	1.00	1.00	n/a	1.00
4P-GPS-030-SF	AS-02263-030	3.62	2.90	3.455	1.927	1.00	1.00	1.00	1.00
4P-GPS-030-IG	AS-02313-030	3.62	2.90	3.455	1.927	1.00	1.00	1.00	1.00
3P-GPS-040-SF	AS-02254-040	4.62	3.88	4.547	2.481	1.50	1.00	n/a	1.00
3P-GPS-040-IG	AS-02304-040	4.62	3.88	4.547	2.481	1.50	1.00	n/a	1.00
4P-GPS-040-SF	AS-02264-040	4.62	3.88	4.547	2.481	1.50	1.00	1.00	1.00
4P-GPS-040-IG	AS-02314-040	4.62	3.88	4.547	2.481	1.50	1.00	1.00	1.00
3P-GPS-060-SF	AS-02256-060	7.13	5.90	6.673	3.544	2.50	1.00	n/a	1.00
3P-GPS-060-IG	AS-02306-060	7.13	5.90	6.673	3.544	2.50	1.00	n/a	1.00
4P-GPS-060-SF	AS-02266-060	7.13	5.90	6.673	3.544	2.50	1.00	1.00	1.00
4P-GPS-060-IG	AS-02316-060	7.13	5.90	6.673	3.544	2.50	1.00	1.00	1.00

UNLESS OTHERWISE SPECIFIED DIMENSIONS ARE IN INCHES
TOLERANCES ARE:
FRACTIONS ±1/64 DECIMALS .XX = ±.01 .XXX = ±0.005 ANGLES ±30'

CAD GENERATED DRAWING, DO NOT MANUALLY UPDATE

MATERIAL --

FINISH --

DO NOT SCALE DRAWING

THE INFORMATION CONTAINED IN THIS DRAWING IS THE SOLE PROPERTY OF labsphere, INC. ANY REPRODUCTION IN PART OR IN WHOLE WITHOUT THE WRITTEN PERMISSION OF labsphere, INC. IS PROHIBITED

labsphere®
PO BOX 70, NORTH SUTTON, NH 03260

3P & 4P-GPS-SPHER-SF & IG

APPROVALS	DATE
RESP ENG C. SHAFFER	10-3-03
CHECKED/APPRVD	

SIZE B | SCALE n/a | SHEET 1 OF 1

DWG. NO. 3P & 4P-GPS-SPHER-SF & IG | REV. A